ZKA extruded brass radial holder

Construction

- Two brass extrusions joined by brazing
- Constant force spring attached to a simple plug in stainless steel carrier

Special Features

- Very compact design, lightweight for medium and light industrial DC machines.
- Spring units are reversable according to direction of rotation.

Alternative fixing details available upon request.

Part No.	Holder Type	Nominal Dimensions (mm)				Imperial/ Metric	'U' Throw (Fixing) Dimensions (mm)	Spring Load (gf)	Serrated (Y/N)	No. Pockets	Fabricated/ Cast
		t	a	Box Height	Brush Length						
ZKA1205M/1001	ZKA	8.00	20.00	31.80	40.00	Metric	14.73	308	N	1	Fabricated
ZKA1206M/1003	ZKA	10.00	20.00	32.00	40.00	Metric	14.73	400	Y	1	Fabricated
ZKA1206M/1004	ZKA	10.00	20.00	32.00	40.00	Metric	14.73	375	N	1	Fabricated
ZKA1206M/1006	ZKA	10.00	20.00	32.00	40.00	Metric	14.73	375	N	1	Fabricated
ZKA1206M/1008	ZKA	10.00	20.00	25.00	32.00	Metric	14.73	375	N	1	Fabricated
ZKA1206M/1010	ZKA	10.00	20.00	32.00	40.00	Metric	14.73	503	N	1	Fabricated
ZKA1206M/1011	ZKA	10.00	20.00	32.00	40.00	Metric	14.73	375	N	1	Fabricated
ZKA1208M/1004	ZKA	12.50	20.00	32.00	40.00	Metric	14.73	503	N	1	Fabricated
ZKA1208M/1006	ZKA	12.50	20.00	32.00	40.00	Metric	14.73	452	N	1	Fabricated
ZKA1208M/1008	ZKA	12.50	20.00	25.00	32.00	Metric	14.73	503	N	1	Fabricated
ZKA1208M/1010	ZKA	12.50	20.00	32.00	40.00	Metric	14.73	503	N	1	Fabricated
ZKA1208M/1011	ZKA	12.50	20.00	32.00	40.00	Metric	14.73	504	Y	1	Fabricated
ZKA1208M/1012	ZKA	12.50	20.00	32.00	40.00	Metric	14.73	1106	N	1	Fabricated
ZKA1208M/1013	ZKA	12.50	20.00	25.00	32.00	Metric	14.73	503	Y	1	Fabricated
ZKA1210M/1001	ZKA	16.00	20.00	32.00	40.00	Metric	14.73	653	N	1	Fabricated
ZKA1210M/1002	ZKA	16.00	20.00	32.00	40.00	Metric	14.73	653	Y	1	Fabricated
ZKA1210M/1003	ZKA	16.00	20.00	32.00	40.00	Metric	14.73	608	N	1	Fabricated
ZKA1210M/1005	ZKA	16.00	20.00	32.00	40.00	Metric	14.73	653	N	1	Fabricated
ZKA1605M/1002	ZKA	8.00	25.00	31.75	40.00	Metric	14.73	375	N	1	Fabricated
ZKA1605M/1003	ZKA	8.00	25.00	32.00	40.00	Metric	14.73	420	Y	1	Fabricated
ZKA1606M/1002	ZKA	10.00	25.00	31.75	40.00	Metric	14.73	494	N	1	Fabricated
ZKA1606M/1008	ZKA	8.00	25.00	31.75	40.00	Metric	14.73	722	N	1	Fabricated
ZKA1608M/1002	ZKA	12.50	25.00	31.75	40.00	Metric	14.73	567	N	1	Fabricated
ZKA1608M/1004	ZKA	12.50	25.00	40.00	50.00	Metric	14.73	617	Y	1	Fabricated
ZKA1608M/1006	ZKA	12.50	25.00	32.00	40.00	Metric	14.73	785	N	1	Fabricated
ZKA1608M/1009	ZKA	12.50	25.00	32.00	40.00	Metric	14.73	567	Y	1	Fabricated
ZKA1608M/1010	ZKA	12.50	25.00	25.00	40.00	Metric	9.50	908	N	1	Fabricated
ZKA1608M/1011	ZKA	12.50	25.00	32.00	40.00	Metric	14.73	567	Y	1	Fabricated
ZKA1610M/1002	ZKA	16.00	25.00	31.75	40.00	Metric	14.73	567	N	1	Fabricated
ZKA1610M/1003	ZKA	16.00	25.00	32.00	40.00	Metric	14.73	720	Y	1	Fabricated
ZKA1610M/1004	ZKA	16.00	25.00	31.75	40.00	Metric	14.73	720	N	1	Fabricated
ZKA1610M/1005	ZKA	16.00	25.00	40.00	50.00	Metric	14.73	785	Y	1	Fabricated
ZKA1610M/1006	ZKA	16.00	25.00	32.00	40.00	Metric	14.73	567	Y	1	Fabricated
ZKA1610M/1010	ZKA	16.00	25.00	32.00	40.00	Metric	14.73	720	N	1	Cast
ZKA1610M/1011	ZKA	16.00	25.00	32.00	40.00	Metric	14.73	844	Y	1	Cast
ZKA1610M/1015	ZKA	16.00	25.00	31.75	40.00	Metric	14.73	844	N	1	Fabricated
ZKA1610M/1016	ZKA	16.00	25.00	31.75	40.00	Metric	14.73	988	N	1	Fabricated
ZKA1610M/1017	ZKA	16.00	25.00	31.75	40.00	Metric	14.73	1134	N	1	Fabricated

PTO

Công ty TNHH Trí Lập
Phòng 602+604, tòa nhà Vinahud
đường Trung Yên 9, KĐT Trung Yên
P. Trung Hòa, Q. Cầu Giấy, Hà Nội

TriLAP Company Limited
Suite 602+604, Vinahud Building
Trung Yen 9 Road, Trung Hoa Ward
Cau Giay Dist., Ha Noi, Viet Nam

Tel: (84-24) 6682 0666
Fax: (84-24)3226 2435
Hotline: 090 414 6666/ 098 873 8818
www.trilap.com.vn

Part No.	Holder Type	Nominal Dimensions (mm)				Imperial/ Metric	'U' Throw (Fixing) Dimensions (mm)	Spring Load (gf)	Serrated (Y/N)	No. Pockets	Fabricated/ Cast
		t	a	Box Height	Brush Length						
ZKA1612M/1002	ZKA	20.00	25.00	31.75	40.00	Metric	14.73	893	N	1	Fabricated
ZKA1612M/1008	ZKA	20.00	25.00	32.00	40.00	Metric	14.73	988	Y	1	Fabricated
ZKA2006M/1002	ZKA	10.00	32.00	40.00	50.00	Metric	14.73	567	N	1	Fabricated
ZKA2006M/1005	ZKA	10.00	32.00	50.00	64.00	Metric	14.73	567	N	1	Fabricated
ZKA2006M/1007	ZKA	10.00	32.00	40.00	50.00	Metric	14.73	644	N	1	Fabricated
ZKA2006M/1008	ZKA	10.00	32.00	50.00	64.00	Metric	14.73	644	N	1	Fabricated
ZKA2006M/1010	ZKA	10.00	32.00	40.00	50.00	Metric	14.73	1134	N	1	Fabricated
ZKA2006M/1011	ZKA	10.00	32.00	40.00	50.00	Metric	14.73	567	N	1	Fabricated
ZKA2008M/1002	ZKA	12.50	32.00	40.00	50.00	Metric	14.73	708	N	1	Fabricated
ZKA2008M/1009	ZKA	12.50	32.00	40.00	50.00	Metric	14.73	884	N	1	Fabricated
ZKA2008M/1011	ZKA	12.50	32.00	40.00	50.00	Metric	14.73	962	N	1	Fabricated
ZKA2008M/1013	ZKA	12.50	32.00	25.00	32.00	Metric	14.73	1134	N	1	Fabricated
ZKA2008M/1014	ZKA	12.50	32.00	40.00	50.00	Metric	14.73	708	Y	1	Fabricated
ZKA2008M/1015	ZKA	12.50	32.00	40.00	50.00	Metric	14.73	708	Y	1	Fabricated
ZKA2008M/1016	ZKA	12.50	32.00	40.00	50.00	Metric	14.73	1270	N	1	Fabricated
ZKA2010M/1002	ZKA	16.00	32.00	40.00	50.00	Metric	14.73	962	N	1	Fabricated
ZKA2010M/1005	ZKA	16.00	32.00	50.00	64.00	Metric	14.73	1061	N	1	Fabricated
ZKA2010M/1008	ZKA	16.00	32.00	50.00	64.00	Metric	14.73	1061	Y	1	Fabricated
ZKA2010M/1014	ZKA	16.00	32.00	40.00	50.00	Metric	14.73	1061	N	1	Fabricated
ZKA2010M/1017	ZKA	16.00	32.00	40.00	50.00	Metric	14.73	962	Y	1	Fabricated
ZKA2010M/1022	ZKA	16.00	32.00	40.00	50.00	Metric	14.73	962	Y	1	Fabricated
ZKA2010M/1023	ZKA	16.00	32.00	50.00	64.00	Metric	14.73	884	N	1	Fabricated
ZKA2010M/1024	ZKA	16.00	32.00	40.00	50.00	Metric	14.73	708	N	1	Fabricated
ZKA2012M/1002	ZKA	20.00	32.00	40.00	50.00	Metric	14.73	1134	N	1	Fabricated
ZKA2012M/1005	ZKA	20.00	32.00	50.00	64.00	Metric	14.73	1134	N	1	Fabricated
ZKA2012M/1009	ZKA	20.00	32.00	50.00	64.00	Metric	14.73	1270	Y	1	Fabricated
ZKA2012M/1016	ZKA	20.00	32.00	50.00	64.00	Metric	14.73	1150	N	1	Fabricated
ZKA2012M/1018	ZKA	20.00	32.00	50.00	64.00	Metric	14.73	1350	N	1	Fabricated
ZKA2012M/1020	ZKA	20.00	32.00	50.00	64.00	Metric	14.73	1134	N	1	Fabricated
ZKA2012M/1021	ZKA	20.00	32.00	40.00	50.00	Metric	14.73	1350	N	1	Fabricated
ZKA2012M/1025	ZKA	20.00	32.00	40.00	50.00	Metric	14.73	1270	N	1	Fabricated
ZKA2012M/1027	ZKA	20.00	32.00	40.00	45.00	Metric	14.73	1134	Y	1	Fabricated
ZKA2012M/1029	ZKA	20.00	32.00	40.00	50.00	Metric	14.73	1134	Y	1	Fabricated
ZKA2016M/1002	ZKA	25.00	32.00	40.00	50.00	Metric	14.73	1415	N	1	Fabricated
ZKA2016M/1005	ZKA	25.00	32.00	50.00	64.00	Metric	14.73	1497	N	1	Fabricated
ZKA2016M/1011	ZKA	25.00	32.00	40.00	50.00	Metric	14.73	1415	Y	1	Fabricated
ZKA2016M/1016	ZKA	25.00	32.00	50.00	64.00	Metric	14.73	2122	N	1	Fabricated
ZKA2016M/1017	ZKA	25.00	32.00	50.00	64.00	Metric	14.73	1497	Y	1	Fabricated
ZKA2016M/1019	ZKA	25.00	32.00	50.00	64.00	Metric	14.73	2268	N	1	Fabricated
ZKA2016M/1020	ZKA	25.00	32.00	50.00	64.00	Metric	14.73	1700	N	1	Fabricated
ZKA2016M/1021	ZKA	25.00	32.00	40.00	50.00	Metric	14.73	1700	N	1	Fabricated
ZKA2016M/1022	ZKA	25.00	32.00	50.00	64.00	Metric	14.73	1284	N	1	Fabricated
ZKA2016M/1023	ZKA	25.00	32.00	50.00	64.00	Metric	14.73	1134	N	1	Fabricated
ZKA2016M/1025	ZKA	25.00	32.00	50.00	64.00	Metric	14.73	1996	Y	1	Fabricated
ZKA2016M/1026	ZKA	25.00	32.00	40.00	50.00	Metric	14.73	1996	Y	1	Fabricated
ZKA2016M/1028	ZKA	25.00	32.00	40.00	50.00	Metric	14.73	1996	N	1	Fabricated
ZKA2016M/1032	ZKA	25.00	32.00	40.00	50.00	Metric	14.73	2268	Y	1	Fabricated
ZKA2016M/1033	ZKA	25.00	32.00	50.00	64.00	Metric	17.00	1497	Y	1	Fabricated
ZKA2016M/1034	ZKA	25.00	32.00	50.00	64.00	Metric	14.73	1606	N	1	Fabricated
ZKA2016M/1035	ZKA	25.00	32.00	40.00	50.00	Metric	14.73	1500	Y	1	Fabricated
ZKA2016M/1036	ZKA	25.00	32.00	40.00	50.00	Metric	14.73	1134	N	1	Fabricated
ZKA2020M/1004	ZKA	32.00	32.00	50.00	64.00	Metric	14.73	2560	Y	1	Fabricated
ZKA2020M/1005	ZKA	32.00	32.00	50.00	64.00	Metric	14.73	1415	Y	1	Fabricated
ZKA2020M/1013	ZKA	32.00	32.00	50.00	64.00	Metric	14.73	2560	N	1	Fabricated
ZKA2020M/1018	ZKA	32.00	32.00	50.00	64.00	Metric	14.73	1996	N	1	Fabricated

Công ty TNHH Trí Lập
Phòng 602+604, tòa nhà Vinahud
đường Trung Yên 9, KĐT Trung Yên
P. Trung Hòa, Q. Cầu Giấy, Hà Nội

TriLAP Company Limited
Suite 602+604, Vinahud Building
Trung Yen 9 Road, Trung Hoa Ward
Cau Giay Dist., Ha Noi, Viet Nam

Tel: (84-24) 6682 0666
Fax: (84-24)3226 2435
Hotline: 090 414 6666/ 098 873 8818
www.trilap.com.vn

ZKA extruded brass radial holder

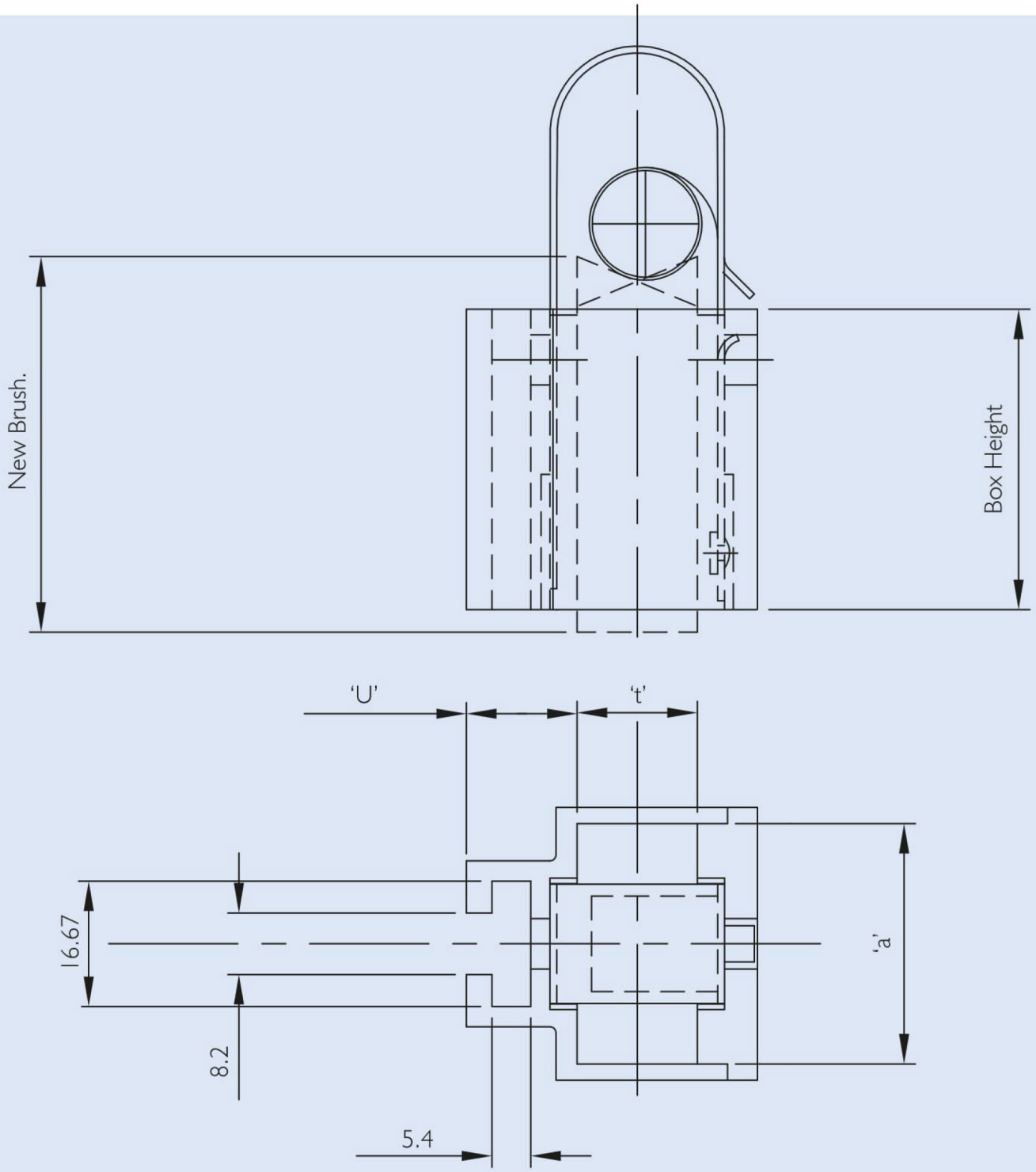

Công ty TNHH Trí Lập
Phòng 602+604, tòa nhà Vinahud
đường Trung Yên 9, KĐT Trung Yên
P. Trung Hòa, Q. Cầu Giấy, Hà Nội

TriLAP Company Limited
Suite 602+604, Vinahud Building
Trung Yen 9 Road, Trung Hoa Ward
Cau Giay Dist., Ha Noi, Viet Nam

Tel: (84-24) 6682 0666
Fax: (84-24)3226 2435
Hotline: 090 414 6666/ 098 873 8818
www.trilap.com.vn